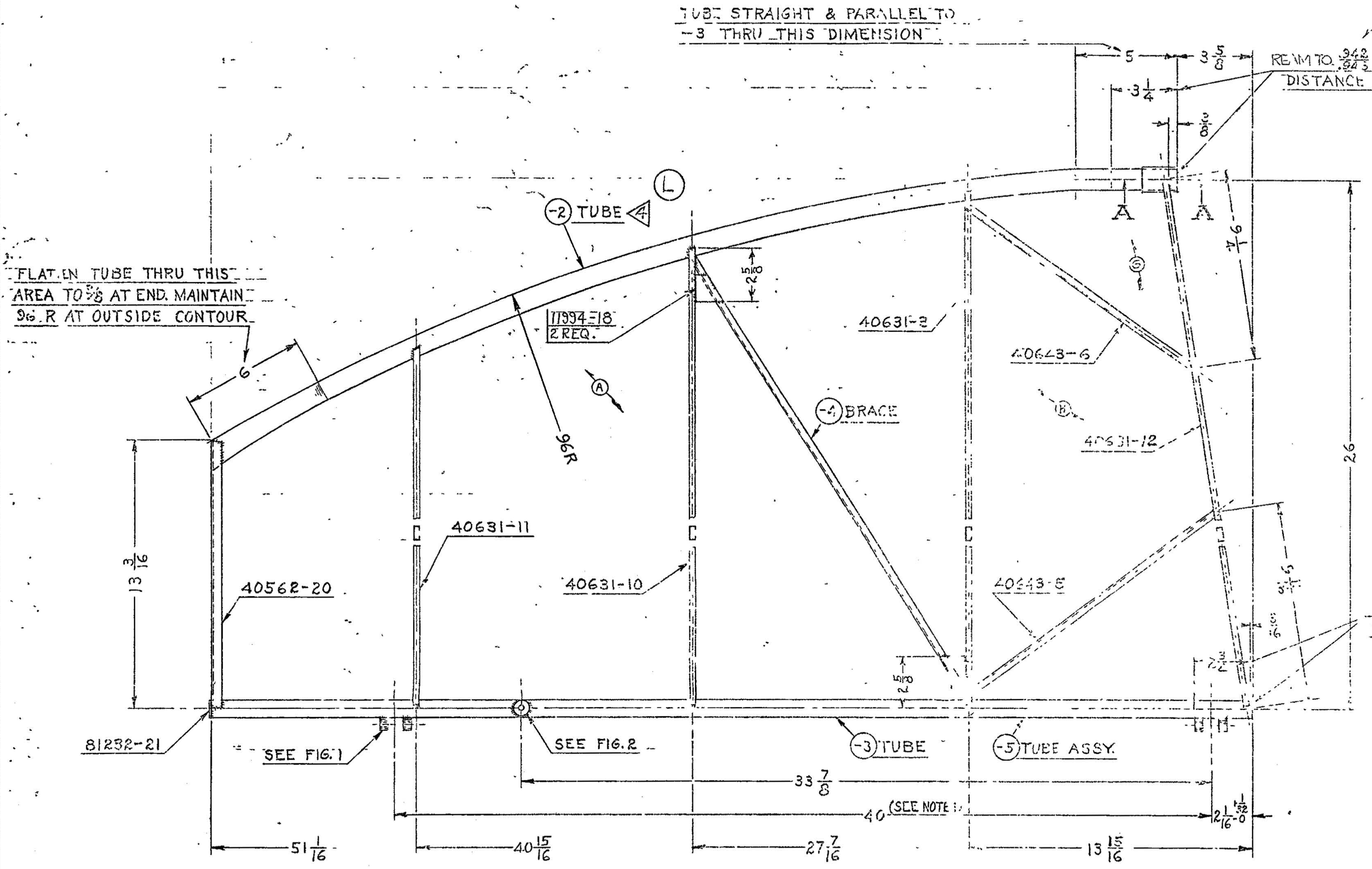
TUBE STRAIGHT & PARALLEL TO -3 THRU THIS DIMENSION
5
3 5/8
3 1/4
REAM TO .942/.945 I.D. FOR DISTANCE INDICATED
(L)
-2 TUBE 4
A A
FLATTEN TUBE THRU THIS AREA TO 5/8 AT END. MAINTAIN 96 R AT OUTSIDE CONTOUR
6
11994-18 2 REQ.
2 5/8
96R
40631-3
40643-6
-4 BRACE
40631-12
26
4 1/4
13 3/16
40562-20
40631-11
40631-10
40643-5
REAM TO .756 MIN. I.D. FOR DISTANCE INDICATED
2 5/8
81232-21
SEE FIG. 1
SEE FIG. 2
-3 TUBE
-5 TUBE ASSY.
33 7/8
40 (SEE NOTE 1)
2 1/16 +1/32 -0
51 1/16
40 15/16
27 7/16
13 15/16

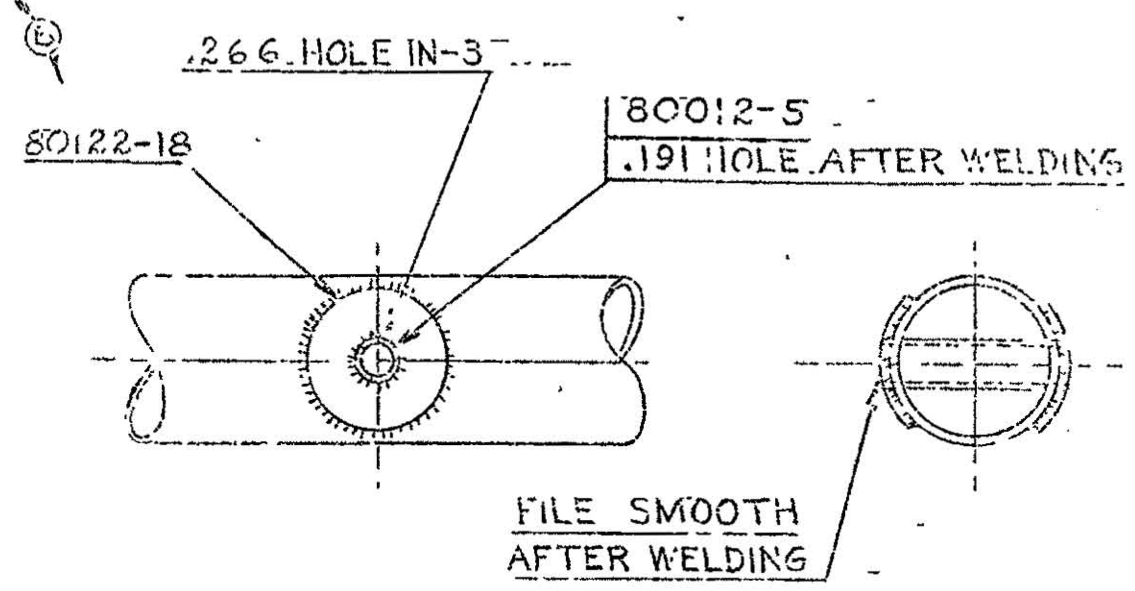
.266 HOLE IN -3
80012-5 .191 HOLE AFTER WELDING
80122-18
FILE SMOOTH AFTER WELDING

FIG. 2
TIE ROD FITTING DETAIL
FULL SIZE

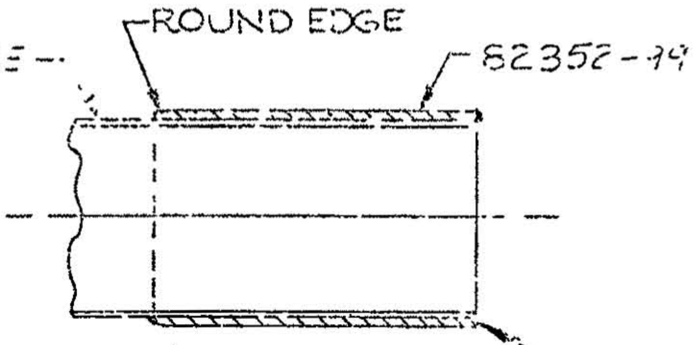
TUBE
ROUND EDGE
82352-99
EDGE WELD

SECTION A-A
FULL SIZE

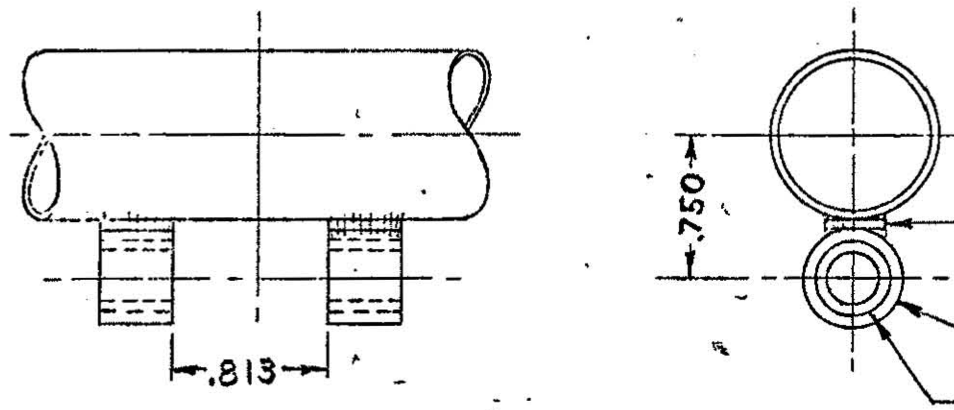
.813
.750
80042-15
80022-22
80022-45 FORCE FIT INTO 80022-22
REAM .249/.251

FIG. 1
HINGE DETAIL
FULL SIZE

NOTE:

1. HINGE CENTERS TO COINCIDE WITH THOSE ON ELEVATOR.
2. MAGNETIC INSPECTION REQUIRED
3. T.I.G. WELD.
4. CUT TUBE TO SPECIFIED LENGTH.
   - a. CHECK I.D. IF ONE END IS .933/.946 FOR A DISTANCE OF 3 1/4 INCHES THAT END SHALL BECOME THE INBOARD END OF THE STABILIZER TUBE.
   - b. TUBES THAT DO NOT MEET THE REQUIREMENTS OF "a" (I.D. LARGER THAN .946) SHALL BE SWAGED TO FALL WITHIN THE REQUIREMENTS OF "a".

PART No.	No. REQ.	SIZE	DESCRIPTION / MATERIAL
11994-18	2	GUSSET	
84501-2	REF.	CHANNEL SECTION	
81232-21	1	DISC	
80122-18	2	WASHER	
82352-99	1	TUBE	
80042-15	4	PLATE	
80022-45	4	BUSHING	
80022-22	4		
80012-5	1		
40643-6	1	BRACE	
40643-5	1		
40631-11	1	RIB	
40631-10	1		
40631-3	1		
40631-12	1		
40562-20	1		
-5	—	TUBE ASSY. CONSISTS OF 1 EA. OF -3 &80012-5; 2 OF 80122-18	
-4	1	25 1/2 LONG	PIPER SECTION 84501-2
-3	1	7/8 X.028 X 51 1/16	#1025 STL. TUBE
-2	1	1 X.028 X 50 1/2	TUBE-STEEL [illegible]

SCALE: IN.= 1 FT. & NOTED
TOTAL WT.-LBS.
FINISH—PIPER SPECIFICATION #10
MANUFACTURING PRACTICES—PIPER SPECIFICATION #9

LET.	REVISION	DATE	BY	CK.
L	EO 12769 L INC.	5-23-75	CH	
K	NOTE 3 ADDED.	[illegible]-27-75	RH	

LET.	REVISION	DATE	BY
J	INE, M FOR -2 MAT'L SPEC [illegible]	2-7-66	[illegible]
H	40631-12 WAS 40631-2 WE. DIA. OF 82352-99 TO -2 TUBE REV.	10-14-64	DLH
G	ADD SEC. A-A, 82352-99, [illegible] SWAGE	[illegible]	
F	IN B/M FOR -2 [illegible] X.028 X 5[illegible] WAS 1 X.028 X 50 1/2	6-24-63	J.C.F.
E	REAM TO [illegible] WAS SWAGE TO .756	4-16-58	[illegible]
D	[illegible] WAS [illegible] 51 1/16	1-24-58	[illegible]
C	NOTE 2 ADDED	9-22-54	M.
B	80122-18 REM.	3-5-53	IEI
A	11994-18 [illegible]	3-31-52	IM

THIS DRAWING IS THE PROPERTY OF THE PIPER AIRCRAFT CORP. AND ITS POSSESSION BY UNAUTHORIZED PERSONS SHALL NOT BE CONSTRUED AS PERMISSION TO REPRODUCE FOR SALE, IN WHOLE OR IN PART, ANY DEVICES SHOWN THEREON

MODEL	PER PLANE	NEXT ASSEMBLY	SUPERSEDES	SUP. BY

PIPER AIRCRAFT CORP.
LOCK HAVEN, PENNA.

PA-18
STABILIZER ASSEMBLY

DRAFTSMAN	CHECKER	STANDARDS
C. E. K. 12-[illegible]-49	J. C. P. 12-27-49	

12769 L